24.7blinds



ELECTRIC ROMAN

BLIND

FITTING GUIDE

Fitting Time:
Approx. 25 min

WARNING: PLEASE READ INSTRUCTIONS THOROUGHLY BEFORE OPERATING THIS PRODUCT

THE INSTALLATION OF THIS PRODUCT SHOULD BE CONDUCTED BY SOMEONE COMPETENT IN DIY.

BEFORE INSTALLATION:

Fully charge the battery pack using the supplied charger.
Typical charge time: approximately 4 hours.
The LED will turn green when charging is complete.

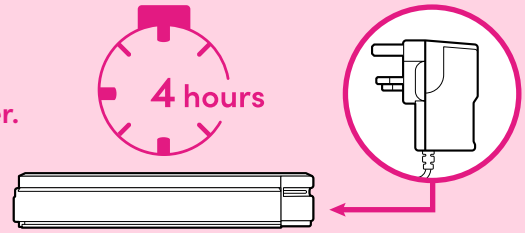

WHAT YOU'LL NEED

Screwdriver	Drill	Measuring tape	Pencil
	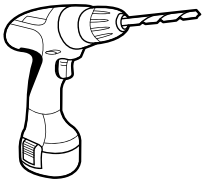	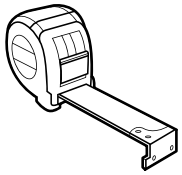	

The correct screws and wall plugs



This could be plaster, wood or even steel depending on the surface you'll be fitting your blind to. We recommend looking online to ensure you get the best fittings for your blind.

WHAT'S IN THE BOX

The blind	The headrail, with built-in motor	Swivel brackets	Remote & charger
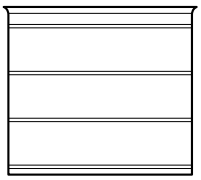	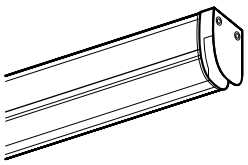	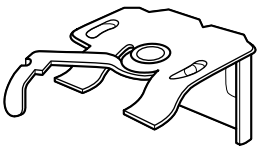	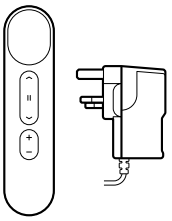

STEP 1 - FITTING THE BLIND BRACKETS

Unpack your roman blind and check that everything is present. Now you need to fit the blind.

Roman blinds come with a set of swivel brackets. The larger the blind gets, the more of these you may have. Decide how you want to fit; you can choose from top-fixing or face-fixing.

A NOTE ON TOP FIXING

The blind depth, from the back of the bracket to the front of the headrail, is approximately 45mm. The fabric on top of this can add 5 - 10mm. Measure and mark the distance where you'll be fitting the brackets, allowing for obstructions like window handles.

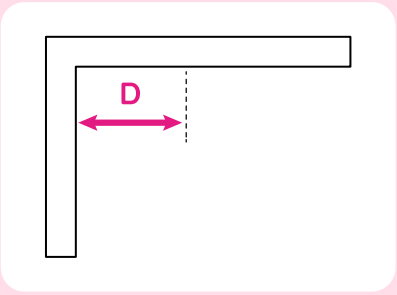

TOP FIX BRACKET

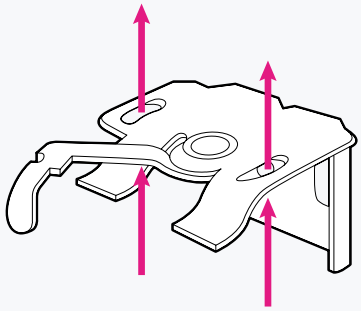

Top fix means to install the screws bottom-up through the top of the brackets, this method is used for attaching to the ceiling or top of the window recess.

FACE FIX BRACKET

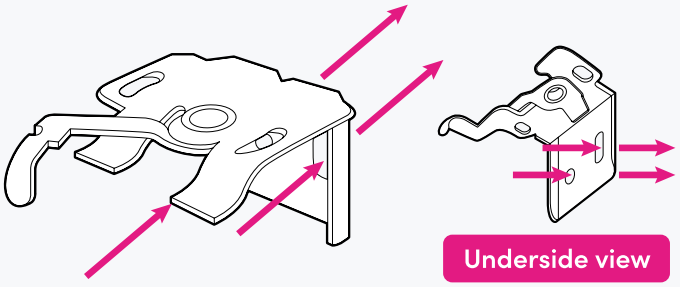

Face fixing means to fit through the back of the brackets, directly onto a vertical surface, such as a wall.

Install the brackets starting from 110mm from the ends of the headrail to start, then install, spacing evenly across the window, for equal support. Hold each bracket in place and mark the hole positions, then fix in position with screws and rawl plugs.

STEP 2 - FITTING THE BLIND

The top of your Roman blind fabric will be fixed to the headrail with velcro. We recommend detaching this for the next step so you can see what you're doing.

The swivel brackets that come with your blind will have a slight lip that slots into the top of the headrail, near the front. Ensure the front arm of the bracket is open (as far counter-clockwise as it will go), then angle the blind and use a gentle swing motion to slot your headrail into place.

Once you have done this, with the brackets and headrail sitting nicely in place, swing the arm to the left, ending in a closed position. This will keep the blind locked into place. Don't be afraid to use a little bit of force if you need to with this step.

Velcro your Roman blind fabric back into place, hiding the bracket arms from the front.

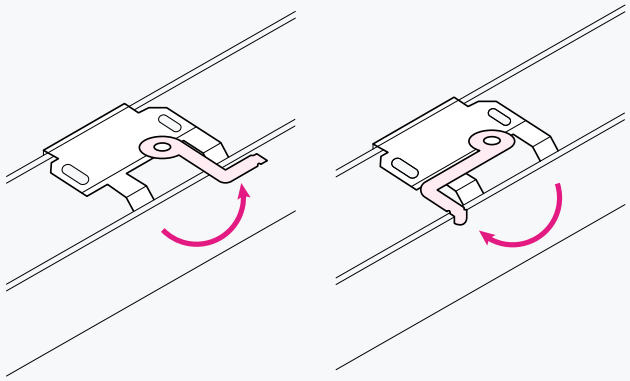

CONFIGURATION & TROUBLESHOOTING

All our electric Roman blinds will arrive ready for installation with remotes paired, so you shouldn't need to action anything here unless troubleshooting or overriding the default settings.

PAIRING THE REMOTE OR ADDING A NEW REMOTE

Your Roman Blind will arrive pre-paired with the remote, should you need to re-pair it, follow the steps below, making sure the motor is charged before you begin.

1. Remove the back cover on your remote control and use the SELECTOR SWITCH to place it in ADMIN mode.

2. Press the M button on the motor for 2 seconds. The motor will jog (move back and forth once) to signal it has entered pairing mode.

3. Within 60 seconds, select the channel you want to pair the blind to, then press and hold the S button on the back of the remote. The motor will jog once to confirm pairing.

4. Use the SELECTOR SWITCH to place the blind back into USER mode.

CHECK MOTOR DIRECTION

1. Remove the back cover on your remote control and use the SELECTOR SWITCH to place it in ADMIN mode.

2. Press UP. If the blind moves up, direction is correct. If the blind moves down, follow the next steps.

3. Press both UP and DOWN together until the motor jogs once.

4. You should now find the direction is corrected, use the SELECTOR SWITCH to place the blind back into USER mode.

SETTING LIMITS

Your Motorised Roman Blind will arrive with the upper and lower limits set, this tells the motor when to stop (in either a fully open or fully closed position). Follow the steps below if you'd like to amend these limits.

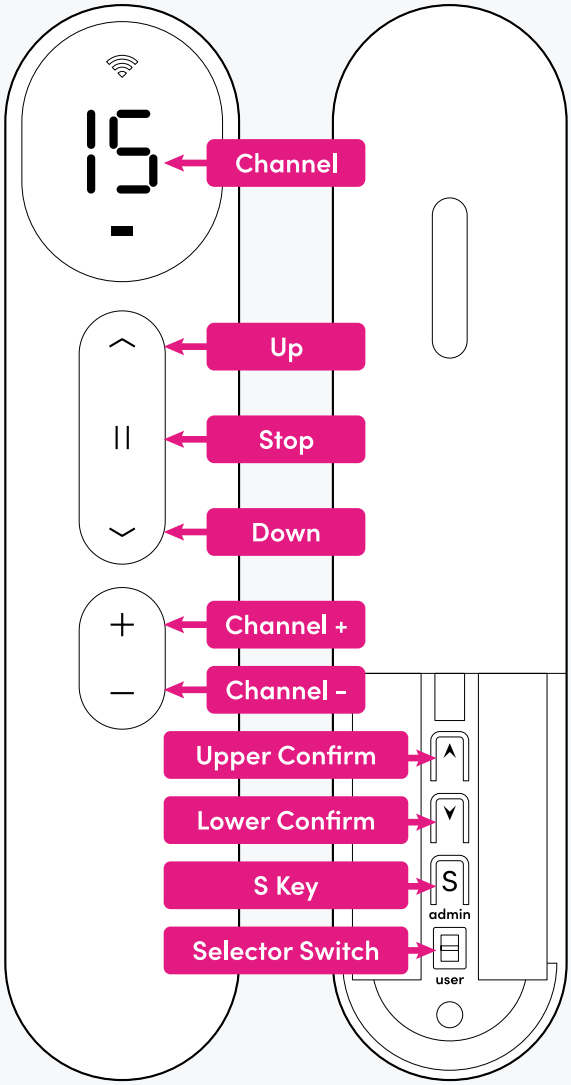

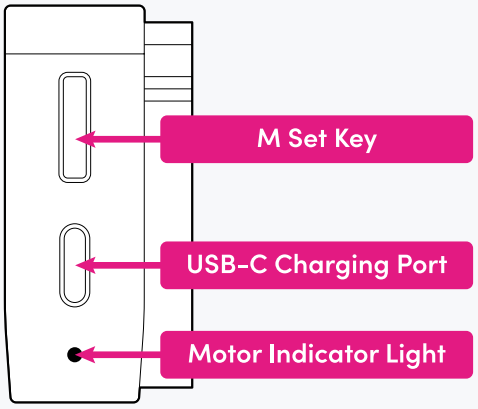

SET THE BOTTOM LIMIT:

1. Remove the back cover on your remote control and use the selector switch to place it in ADMIN mode.

2. Use the DOWN button on the front of the remote to stop the blinds at the desired lower limit.

3. Press the LOWER CONFIRM button on the back of the remote for two seconds, the motor should jog once confirming the lower limit is set.

4. Use the SELECTOR SWITCH to place the blind back into USER mode.

SET THE UPPER LIMIT:

1. Remove the back cover on your remote control and use the SELECTOR SWITCH to place it in ADMIN mode.

2. Use the UP button on the front of the remote to stop the blinds at the desired upper limit.

3. Press the UPPER CONFIRM button on the back of the remote for two seconds, the motor should jog once confirming the upper limit is set.

4. Use the SELECTOR SWITCH to place the blind back into USER mode.

Your limits are now fully set.

REMOVING A REMOTE (OPTIONAL)

1. Remove the back cover on your remote control and use the SELECTOR SWITCH to place it in ADMIN mode.

2. Press the S KEY on the back of the remote you'd like to remove 5 times. The motor should jog once to confirm the remote has been removed.

3. Use the SELECTOR SWITCH to place the blind back into USER mode.

CHANGING MOTOR SPEED (OPTIONAL)

The motor has three levels of running speed, by default your blind will arrive at the slowest, quietest setting. If you'd like to change this, follow the instructions below.

1. If not already in USER mode, remove the back cover on your remote control and use the SELECTOR SWITCH to place it in USER mode.

2. TO INCREASE SPEED: press and hold the UP and STOP button on the front of the remote at the same time until the motor jogs, indicating it has moved up one gear. Repeat to move up to third gear.

3. TO DECREASE SPEED: press and hold the DOWN and STOP button on the front of the remote at the same time until the motor jogs, indicating it has moved down one gear. Repeat to lower again.

CHILD SAFETY



WARNING

Young children can be strangled by loops in pull cords, chains, tapes and inner cords that operate the product.

To avoid strangulation and entanglement, keep cords out of the reach of young children.

Cords may become wrapped around a child's neck. Move beds, cots and furniture away from window covering cords.

Do not tie cords together. Make sure cords do not twist and create a loop.